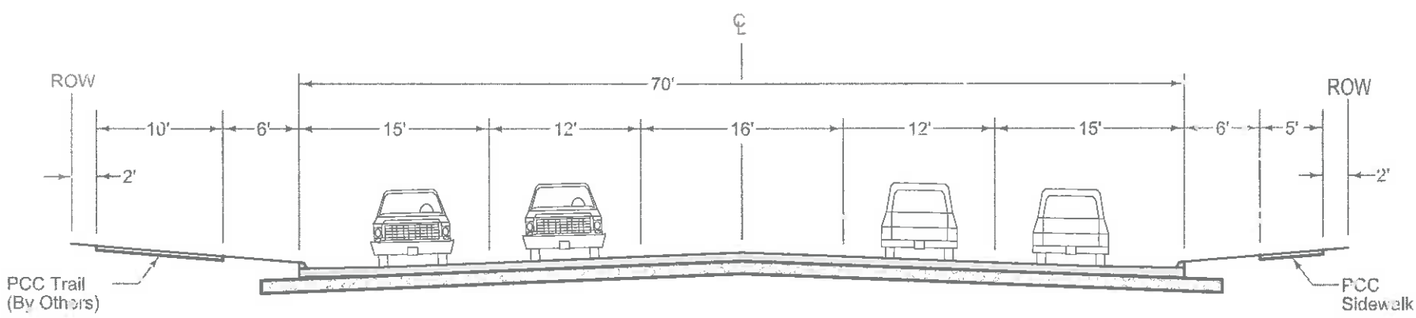

IA 1 - TYPICAL LANE SECTION
LOOKING NORTH EAST

SNYDER & ASSOCIATES
Engineers and Planners

U.S. 30
MT. VERNON\LISBON BYPASS
IA 1 TYPICAL ROADWAY

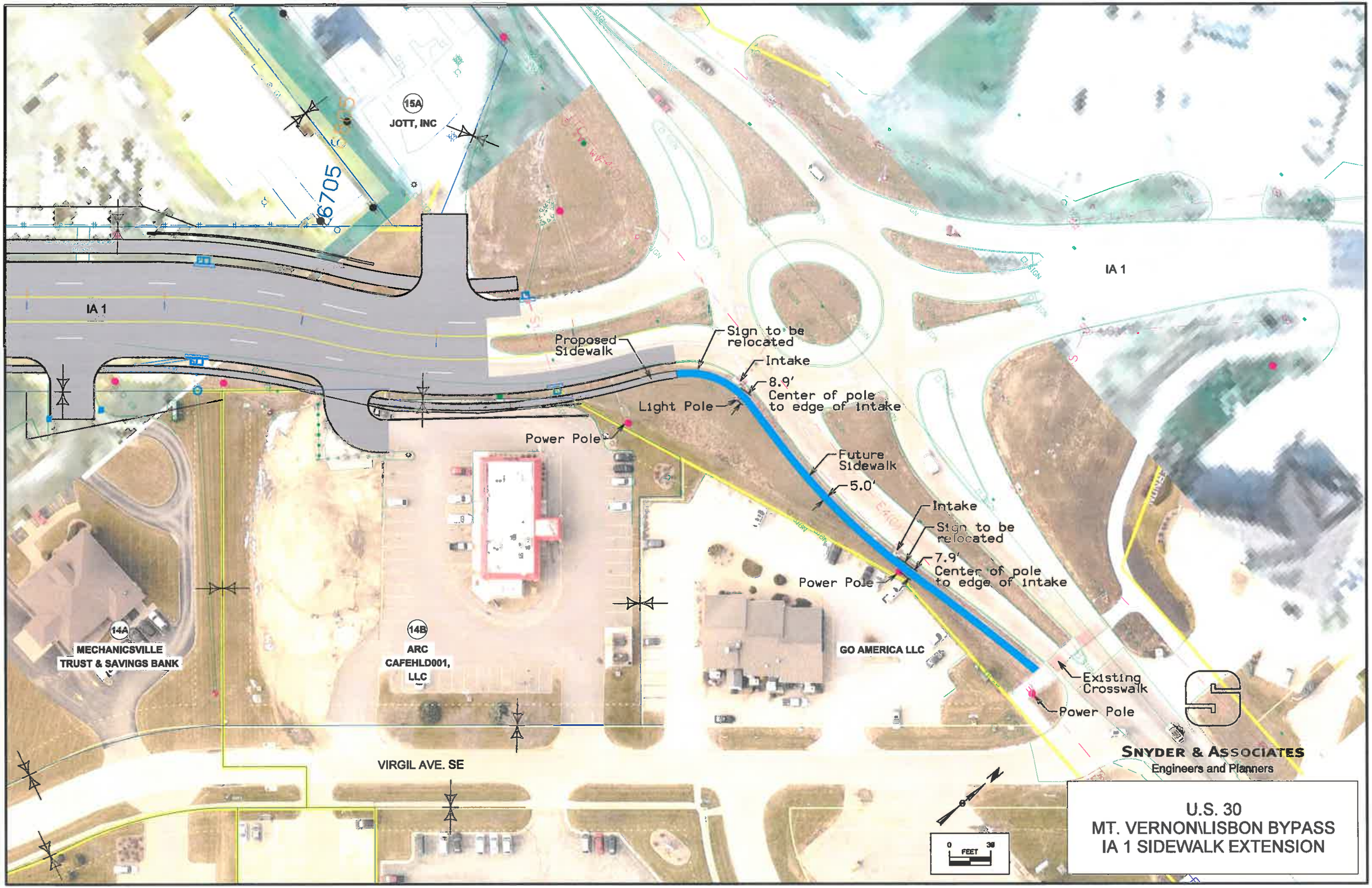
15A
JOTT, INC
6705
IA 1
IA 1
Proposed Sidewalk
Sign to be relocated
Intake
8.9'
Center of pole to edge of intake
Light Pole
Power Pole
Future Sidewalk
5.0'
Intake
Sign to be relocated
7.9'
Center of pole to edge of intake
Power Pole
14A
MECHANICSVILLE TRUST & SAVINGS BANK
14B
ARC CAFEHLD001, LLC
GO AMERICA LLC
Existing Crosswalk
Power Pole
VIRGIL AVE. SE
SNYDER & ASSOCIATES
Engineers and Planners
0 FEET 30
U.S. 30
MT. VERNON\LISBON BYPASS
IA 1 SIDEWALK EXTENSION

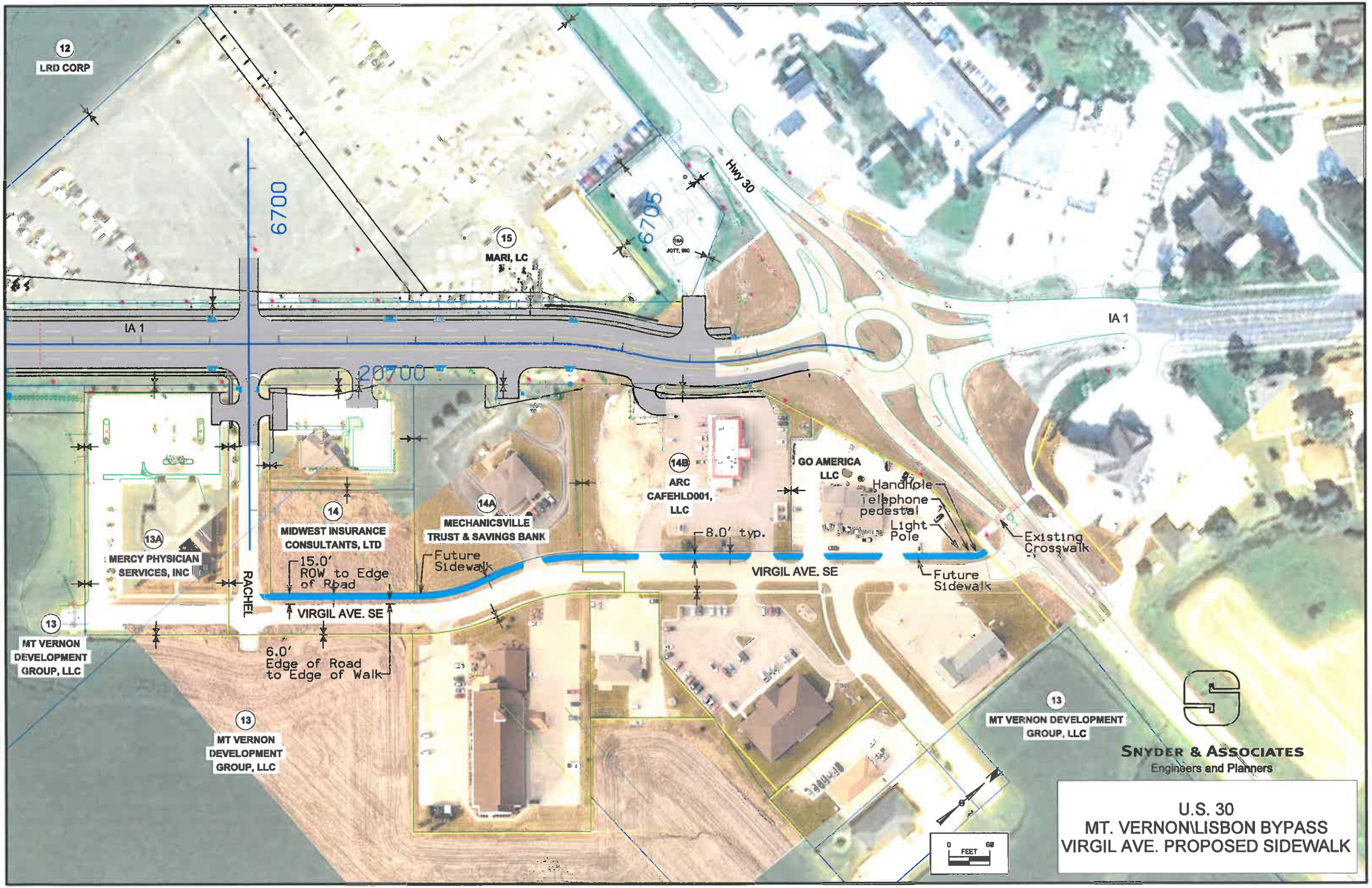
12
LRD CORP
6700
15
MARI, LC
6705
JOTT, INC
Hwy 30
IA 1
IA 1
20700
14B
ARC
CAFEHLD001,
LLC
GO AMERICA
LLC
Handhole
Telephone
pedestal
Light
Pole
Existing
Crosswalk
14
MIDWEST INSURANCE
CONSULTANTS, LTD
14A
MECHANICSVILLE
TRUST & SAVINGS BANK
8.0' typ.
13A
MERCY PHYSICIAN
SERVICES, INC
15.0'
ROW to Edge
of Road
Future
Sidewalk
VIRGIL AVE. SE
Future
Sidewalk
RACHEL
VIRGIL AVE. SE
13
MT VERNON
DEVELOPMENT
GROUP, LLC
6.0'
Edge of Road
to Edge of Walk
13
MT VERNON
DEVELOPMENT
GROUP, LLC
13
MT VERNON DEVELOPMENT
GROUP, LLC
SNYDER & ASSOCIATES
Engineers and Planners
0
60
FEET
U.S. 30
MT. VERNON\LISBON BYPASS
VIRGIL AVE. PROPOSED SIDEWALK